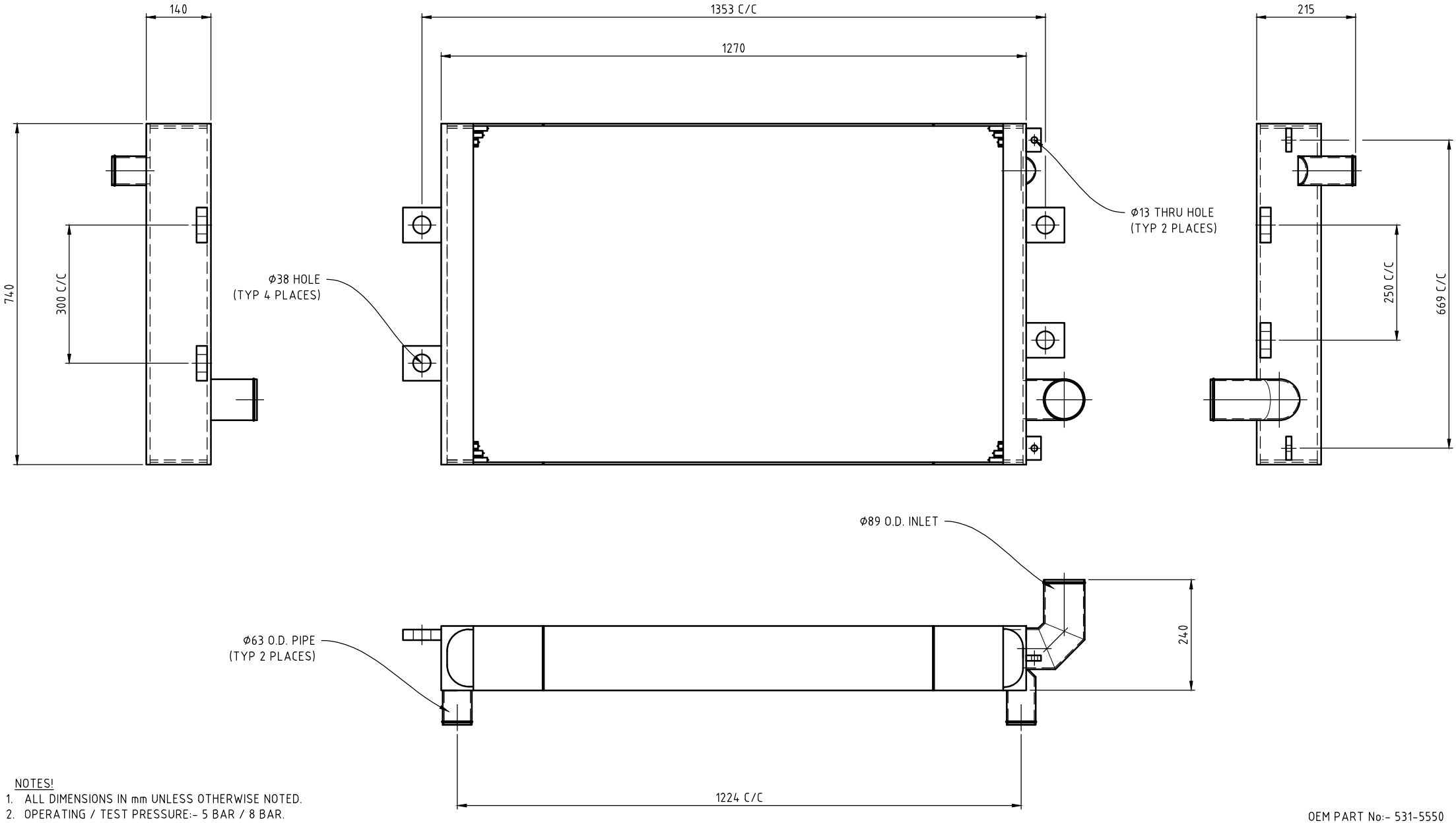

NOTES!

1. ALL DIMENSIONS IN mm UNLESS OTHERWISE NOTED.
2. OPERATING / TEST PRESSURE:- 5 BAR / 8 BAR.

OEM PART No:- 531-5550

No	DESCRIPTION	BY	CHD	DATE
5				
4				
3				
2				
1				

REVISIONS

THIS DOCUMENT IS THE PROPERTY OF GHT - AUSTRALIA P/L. NO EXPLOITATION OR TRANSFER OF ANY INFORMATION CONTAINED HERIN IS PERMITTED WITHOUT THE WRITTEN CONSENT OF GHT - AUSTRALIA P/L.

Global Heat Transfer Australia

GLOBAL HEAT TRANSFER AUSTRALIA P/L

DRAWN: W.Y.W.

DATE: 8-6-2023

CHECKED:

MATERIAL: ALUMINIUM

TITLE: CATERPILLAR MD6250 BLASTHOLE DRILL LEFT HAND RADIATOR ARRANGEMENT

SCALE	SIZE	DWG No	REV
1:8	A3	AR/14/MD6250LH	0